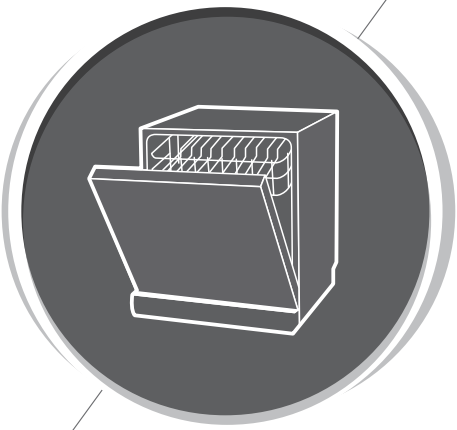

Dishwasher
Instruction Manual

PART Ⅰ: Generic Version

ADW5608B / ADW5608S / ADW5608W

ARTUSI

Please read this manual carefully
before using the dishwasher and
Keep this manual for future reference.

CONTENTS

01 3 **SAFETY INFORMATION**

02 8 **PRODUCT OVERVIEW**

03
9 **MAINTENANCE AND CLEANING**
9 External Care
9 Internal Care
12 Caring For The Dishwasher

04
13 **INSTALLATION INSTRUCTION**
13 About Power Connection
14 Water Supply And Drain
15 Connection Of Drain Hoses
16 Position The Appliance
17 Built-In Installation(for the integrated model)

05 19 **TROUBLESHOOTING TIPS**

06 22 **LOADING THE BASKETS ACCORDING TO AS/NZS 2007.1**

NOTE:

- Reviewing the section on troubleshooting Tips will help you solve some common problems by yourself.
- If you cannot solve the problems by yourself, please ask for help from a professional technician.
- The manufacturer, following a policy of constant development and updating of the product, may make modifications without giving prior notice.
- If lost or out-of-date, you can receive a new user manual from the manufacturer or responsible vendor.

SAFETY INFORMATION

⚠ WARNING

When using your dishwasher , follow the precautions listed below:

- Installation and repair can only be carried out by a qualified technician
- This appliance is intended to be used in household and similar applications such as:
  -staff kitchen areas in shops, offices and other working environments;
  -farm houses;
  -by clients in hotels, motels and other residential type environments;
  -bed and breakfast type environments.
- This appliance can be used by children aged from 8 years and above and persons with reduced physical, sensory or mental capabilities or lack of experience and knowledge if they have been given supervision or instruction concerning use of the appliance in a safe way and understand the hazards involved.
- Children shall not play with the appliance. Cleaning and user maintenance shall not be done by children without supervision. (For EN60335-1)
  This appliance is not intended for use by persons (including children) with reduced physical, sensory or

mental capabilities, or lack of experience and knowledge, unless they have been given supervision or instruction concerning use of the appliance by a person responsible for their safety. (For IEC60335-1)

- Packaging material could be dangerous for children!
- This appliance is for indoor household use only.
  To protect against the risk of electrical shock, do not immerse the unit, cord or plug in water or other liquid.
- Please unplug before cleaning and performing maintenance on the appliance.
- Use a soft cloth moistened with mild soap, and then use a dry cloth to wipe it again.

Earthing Instructions

- This appliance must be earthed. In the event of a malfunction or breakdown, earthing will reduce the risk of an electric shock by providing a path of least resistance of electric current. This appliance is equipped with an earthing conductor plug.
- The plug must be plugged into an appropriate outlet that is installed and earthed in accordance with all local codes and ordinances.
- Improper connection of the equipment-earthing conductor can result in the risk of an electric shock.
- Check with a qualified electrician or service representative if you are in doubt whether the appliance is properly grounded.

- Do not modify the plug provided with the appliance; If it does not fit the outlet.
- Have a proper outlet installed by a qualified electrician.
- Do not abuse, sit on, or stand on the door or dish rack of the dishwasher.
- Do not operate your dishwasher unless all enclosure panels are properly in place.
- Open the door very carefully if the dishwasher is operating, there is a risk of water squirting out.
- Do not place any heavy objects on or stand on the door when it is open. The appliance could tip forward.
- When loading items to be washed:
  1) Locate sharp items so that they are not likely to damage the door seal;
  2) Warning: Knives and other utensils with sharp points must be loaded in the basket with their points facing down or placed in a horizontal position.
- Some dishwasher detergents are strongly alkaline. They can be extremely dangerous if swallowed. Avoid contact with the skin and eyes and keep children away from the dishwasher when the door is open.
- Check that the detergent powder is empty after completion of the wash cycle.

- Do not wash plastic items unless they are marked “dishwasher safe” or the equivalent.
- For unmarked plastic items not so marked, check the manufacturer's recommendations.
- Use only detergent and rinse agents recommended for use in an automatic dishwasher.
- Never use soap, laundry detergent, or hand washing detergent in your dishwasher.
- The door should not be left open, since this could increase the risk of tripping.
  If the supply cord is damaged, it must be replaced by the manufacturer or its service agent or a similarly qualified person in order to avoid a hazard.
- During installation, the power supply must not be excessively or dangerously bent or flattened.
- Do not tamper with controls.
- The appliance needs to be connected to the main water valve using new hose sets. Old sets should not be reused.
- To save energy, in stand by mode , the appliance will switch off automatically while there is no any operation in 15 minutes .

Disposal

- For disposing of package and the appliance please go to a recycling center. Therefore cut off the power supply cable and make the door closing device unusable.
- Cardboard packaging is manufactured from recycled paper and should be disposed in the waste paper collection for recycling.
- By ensuring this product is disposed of correctly, you will help prevent potential negative consequences for the environment and human health, which could otherwise be caused by inappropriate waste handling of this product.
- For more detailed information about recycling of this product, please contact your local city office and your household waste disposal service.
- **DISPOSAL: Do not dispose this product as unsorted municipal waste. Collection of such waste separately for special treatment is necessary.**

PRODUCT OVERVIEW

❗ IMPORTANT:

To get the best performance from your dishwasher, read all operating instructions before using it for the first time.

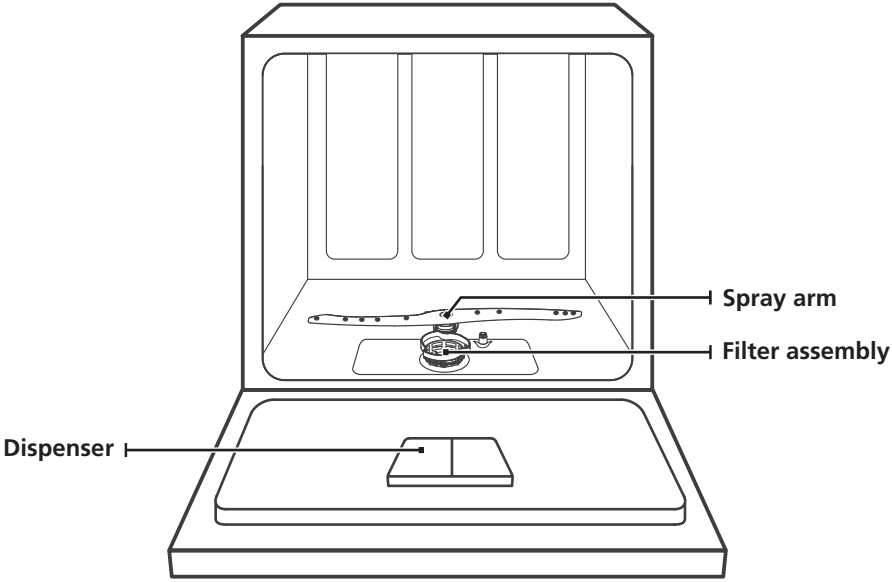

Upper basket **Lower basket** **Cutlery rack**

💡 NOTE:

Pictures are only for reference, different models may be different.
Please prevail in kind.

MAINTENANCE AND CLEANING

External Care

The door and the door seal

Clean the door seals regularly with a soft damp cloth to remove food deposits. When the dishwasher is being loaded, food and drink residues may drip onto the sides of the dishwasher door. These surfaces are outside the wash cabinet and are not accessed by water from the spray arms. Any deposits should be wiped off before the door is closed.

The control panel

If cleaning is required, the control panel should be wiped with a soft damp cloth only.

⚠ WARNING

- To avoid penetration of water into the door lock and electrical components, do not use a spray cleaner of any kind.
- Never use abrasive cleaners or scouring pads on the outer surfaces because they may scratch the finish. Some paper towels may also scratch or leave marks on the surface.

Internal Care

Filtering system

The filtering system in the base of the wash cabinet retains coarse debris from the washing cycle. The collected coarse debris may cause the filters to clog. Check the condition of the filters regularly and clean them if necessary under running water. Follow the steps below to clean the filters in the wash cabinet.

NOTE:

Pictures are only for reference, different models of the filtering system and spray arms may be different.

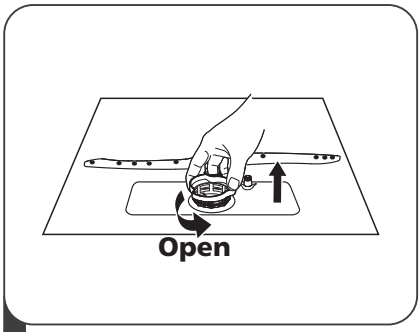

1 Hold the coarse filter and rotate it anticlockwise to unlock the filter. Lift the filter upwards and out of the dishwasher.

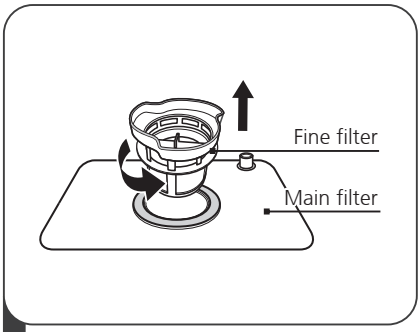

2 Lift fine filter up from main filter.

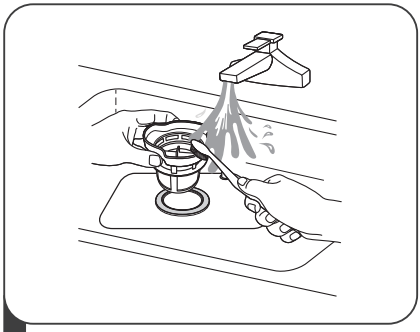

3 Larger food remnants can be cleaned by rinsing the filter under running water.
For a more thorough clean, use a soft cleaning brush.

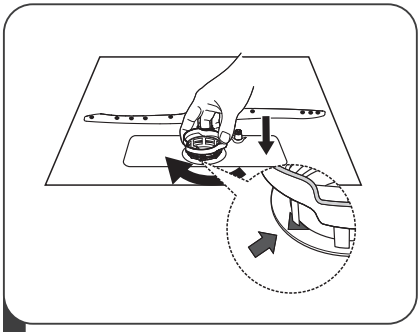

4 Reassemble the filters in the reverse order of the disassembly, replace the filter insert, and rotate clockwise to the close arrow.

⚠ WARNING

- Do not over tighten the filters. Put the filters back in sequence securely, otherwise coarse debris could get into the system and cause a blockage.
- Never use the dishwasher without filters in place. Improper replacement of the filter may reduce the performance level of the appliance and damage dishes and utensils.

Spray arms

It is necessary to clean the spray arms regularly for hard water chemicals will clog the spray arm jets and bearings.

To clean the spray arms, follow the instructions below:

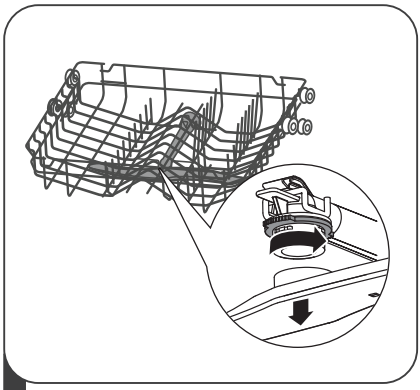

1 To remove the upper spray arm, hold the nut in the center still and rotate the spray arm counterclockwise to remove it.

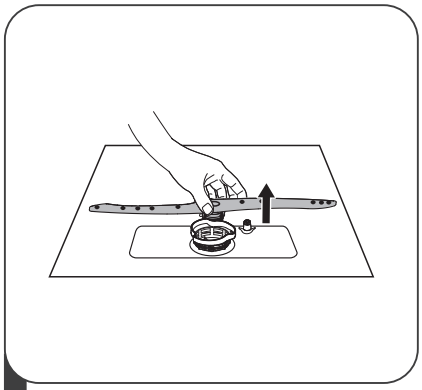

2 To remove the lower spray arm, pull out the spray arm upward.

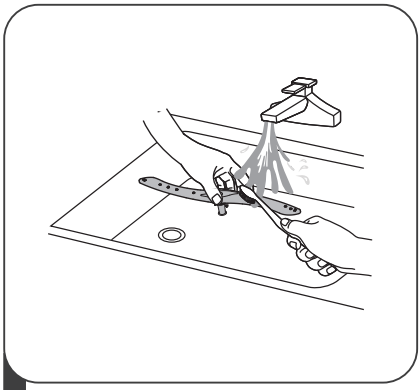

3 Wash the arms in soapy and warm water and use a soft brush to clean the jets. Replace them after rinsing them thoroughly.

Caring For The Dishwasher

Frost precaution

please take frost protection measures on the dishwasher in winter. After every washing cycles, please operate as follows:

1. Cut off the electrical power to the dishwasher at the supply source.
2. Turn off the water supply and disconnect the water inlet pipe from the water valve.
3. Drain the water from the inlet pipe and water valve. (Use a pan to gather the water)
4. Reconnect the water inlet pipe to the water valve.
5. Remove the filter at the bottom of the tub and use a sponge to soak up water in the sump.

After every wash

After every wash, turn off the water supply to the appliance and leave the door slightly open so that moisture and odors are not trapped inside.

Remove the plug

Before cleaning or performing maintenance, always remove the plug from the socket.

No solvents or abrasive cleaning

To clean the exterior and rubber parts of the dishwasher, do not use solvents or abrasive cleaning products. Only use a cloth with warm soapy water.
To remove spots or stains from the surface of the interior, use a cloth dampened with water an a little vinegar, or a cleaning product made specifically for dishwashers.

When not in use for a longtime

It is recommend that you run a wash cycle with the dishwasher empty and then remove the plug from the socket, turn off the water supply and leave the door of the appliance slightly open. This will help the door seals to last longer and prevent odors from forming within the appliance.

Moving the appliance

If the appliance must be moved, try to keep it in the vertical position. If absolutely necessary, it can be positioned on its back.

Seals

One of the factors that cause odours to form in the dishwasher is food that remains trapped in the seals. Periodic cleaning with a damp sponge will prevent this from occurring.

INSTALLATION INSTRUCTION

⚠WARNING

Electrical Shock Hazard
Disconnect electrical power before installing dishwasher.
Failure to do so could result in death or electrical shock.

⚠ Attention

The installation of the pipes and electrical equipments should be done by professionals.

About Power Connection

⚠WARNING

For personal safety:

- Do not use an extension cord or an adapter plug with this appliance.
- Do not, under any circumstances, cut or remove the earthing connection from the power cord.

Electrical requirements

Please look at the rating label to know the rating voltage and connect the dishwasher to the appropriate power supply. Use the required fuse 10A/13A/16A, time delay fuse or circuit breaker recommended and provide separate circuit serving only this appliance.

Electrical connection

Ensure the voltage and frequency of the power being corresponds to those on the rating plate. Only insert the plug into an electrical socket which is earthed properly. If the electrical socket to which the appliance must be connected is not appropriate for the plug , replace the socket, rather than using a adaptors or the like as they could cause overheating and burns.

⚠ Ensure that proper earthing exists before use

Water Supply And Drain

Cold water connection

Connect the cold water supply hose to a threaded 3/4(inch) connector and make sure that it is fastened tightly in place.
If the water pipes are new or have not been used for an extended period of time, let the water run to make sure that the water is clear. This precaution is needed to avoid the risk of the water inlet to be blocked and damage the appliance.

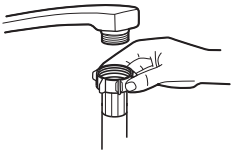

ordinary supply hose

safety supply hose

About the safety supply hose

The safety supply hose consists of the double walls. The hose's system guarantees its intervention by blocking the flow of water in case of the supply hose breaking and when the air space between the supply hose itself and the outer corrugated hose is full of water.

⚠WARNING

A hose that attaches to a sink spray can burst if it is installed on the same water line as the dishwasher. If your sink has one, it is recommended thet the hose be disconnected and the hole plugged.

How to connect the safety supply hose

1. Pull The safety supply hoses completely out from storage compartment located at rear of dishwasher.
2. Tighter the screws of the safety supply hose to the faucet with thread 3/4inch.
3. Turn water fully on before starting the dishwasher.

How to disconnect the safety supply hose

1. Turn off the water.
2. Unscrew the safety supply hose from the faucet.

Connection Of Drain Hoses

Insert the drain hose into a drain pipe with a minimum diameter of 4 cm, or let it run into the sink, making sure to avoid bending or crimping it. The height of drain pipe must be less than 750mm. The free end of the hose must not be immersed in water to avoid the back flow of it.

⚠ Please securely fix the drain hose in either position A or position B

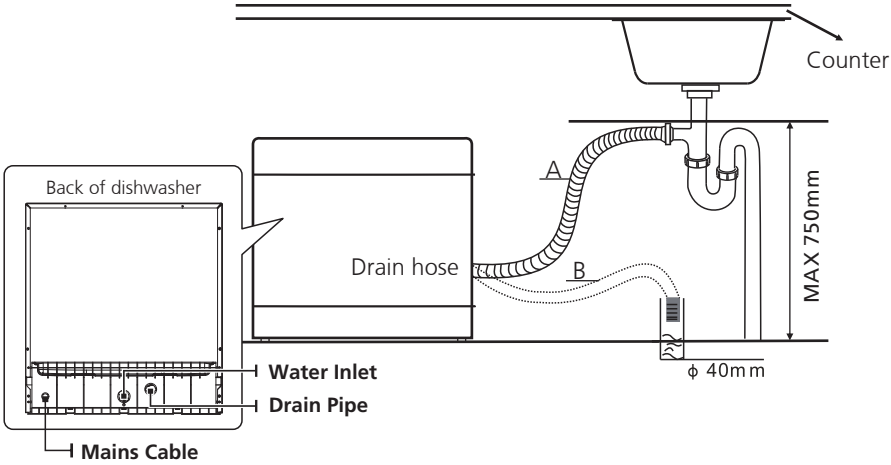

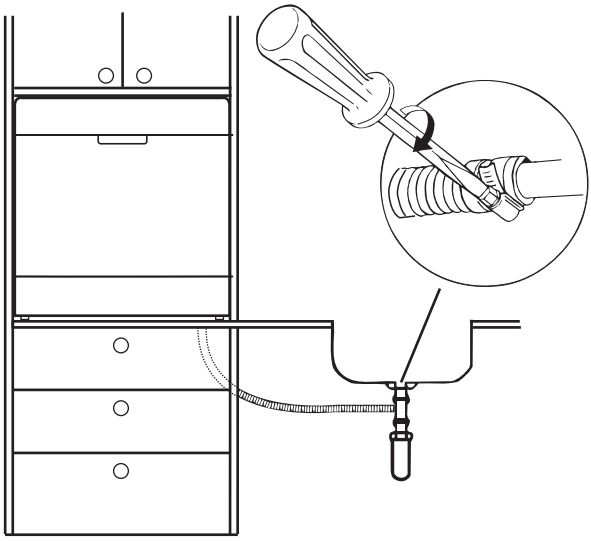

How to drain excess water from hoses

If the sink is 1000 higher from the floor, the excess water in hoses cannot be drained directly into the sink. It will be necessary to drain excess water from hoses into a bowl or suitable container that is held outside and lower than the sink.

Water outlet

Connect the water drain hose. The drain hose must be correctly fitted to avoid water leaks. Ensure that the water drain hose is not kinked or squashed.

Extension hose

If you need a drain hose extension, make sure to use a similar drain hose.
It must be no longer than 4 meters; otherwise the cleansing effect of the dishwasher could be reduced.

Syphon connection

The waste connection must be at a height less than 75 cm (maximum) from the bottom of the dish. The water drain hose should be fixed .

Position The Appliance

Position the appliance in the desired location. The back should rest against the wall behind it, and the sides, along the adjacent cabinets or walls. The dishwasher is equipped with water supply and drain hoses that can be positioned either to the right or the left sides to facilitate proper installation.

Built-In Installation(for the integrated model)

Step 1. Selecting the best location for the dishwasher

The installation position of dishwasher should be near the existing inlet and drain hoses and power cord.

Illustrations of cabinet dimensions and installation position of the dishwasher.

1. Less than 5 mm between the top of dishwasher and cabinet and the outer door aligned to cabinet.

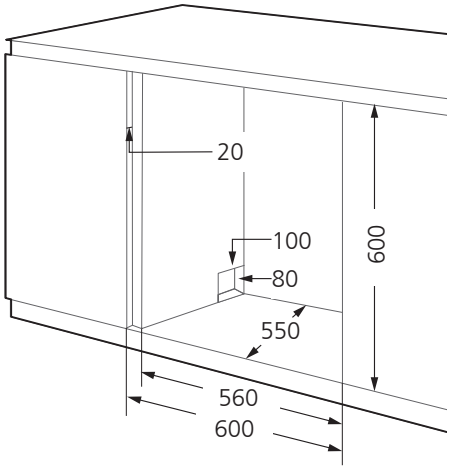

2. If dishwasher is in stalled at the corner of the cabinet, there should be some space when the door is opened.

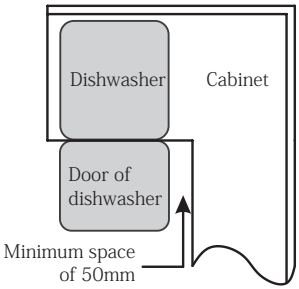

Step 2. Install the dishwasher in cabinet

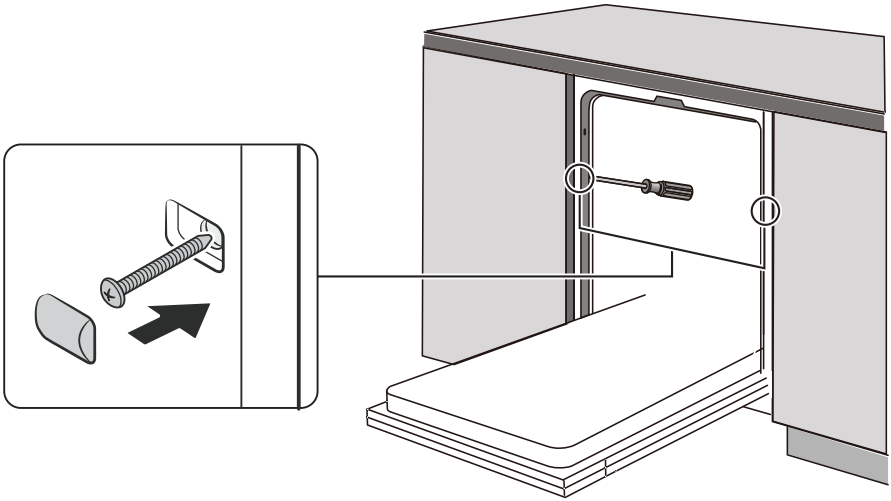

TROUBLESHOOTING TIPS

Before Calling For Service

Reviewing the charts on the following pages may save you from calling for service.

Problem	Possible causes	Solution
Dishwasher doesn't start	Fuse blown, or the circuit breaker tripped.	Replace fuse or reset circuit breaker. Remove any other appliances sharing the same circuit with the dishwasher.
	Power supply is not turned on.	Make sure the dishwasher is turned on and the door is closed securely. Make sure the power cord is properly plugged into the wall socket.
	Door of dishwasher not properly closed.	Make sure to close the door property and latch it.
Water not pumped from dishwasher	Kink in drain hose	Check drain hose.
	Filter clogged.	Check the coarse filter. (see section titled " Internal Care ")
	Kitchen sink clogged.	Check the kitchen sink to make sure it is draining well. If the problem is the kitchen sink that is not draining , you may need a plumber rather than a serviceman for dishwashers.
Suds in the tub	Improper detergent	Use only the special dishwasher detergent to avoid suds. If this occurred, open the dishwasher and let suds evaporate. Add 1 gallon of cold water to the tub. Close and latch the dishwasher, then Start any wash cycle to drain out the water. Repeat if necessary.
	Spilled rinse-aid.	Always wipe up rinse-aid spills immediately.
Stained tub interior	Detergent with colourant may have been used.	Make sure that the detergent has no colourant.
White film on inside surface	Hard water minerals.	To clean the interior, use a damp sponge with dishwasher detergent and wear rubber gloves. Never use any other cleaner than dishwasher detergent for the risk of foaming or suds.

Problem	Possible Causes	What To Do
There are rust stains on cutlery	The affected items are not corrosion resistant.	Avoid washing items that are not corrosion resistant in the dishwasher.
Knocking noise in the wash cabinet	The spray arm is knocking against an item in a basket.	Interrupt the program, and rearrange the items which are obstructing the spray arm.
Rattling noise in the wash cabinet	Item of crockery are loose in the wash cabinet.	Interrupt the program, and rearrange the items of crockery.
Knocking noise in the water pipes	This may be caused by on-site installation or the cross-section of the piping.	This has no influence on the dishwasher function. If in doubt, contact a qualified plumber.
The dishes are not clean	The dishes were not loaded correctly.	See PART Ⅱ "Preparing And Loading Dishes".
	The program was not powerful enough.	Select a more intensive program.
	Not enough detergent was dispensed.	Use more detergent, or change your detergent.
	Item are blocking the path of spray arms.	Rearrange the items so that the spray can rotate freely.
	The filter combination in the base of wash cabinet is not clean or is not correctly fitted. This may cause the spray arm jets to get blocked.	Clean and/or fit the filter correctly. Clean the spray arm jets.
Cloudiness on glassware.	Combination of soft water and too much detergent.	Use less detergent if you have soft water and select a shorter cycle to wash the glassware and to get them clean.
Black or grey marks on dishes	Aluminium utensils have rubbed against dishes	Use a mild abrasive cleaner to eliminate those marks.

Problem	Possible Causes	What To Do
Detergent left in dispenser cups	Dishes block detergent dispenser cups	Re-loading the dishes properly.
The dishes aren't drying	Improper loading	Load the dishwasher as suggested in the directions.
	Too little rinse-aid	Increase the amount of rinse-aid / Refill the rinse-aid dispenser.
	Dishes are removed too soon	Do not empty your dishwasher immediately after washing. Open the door slightly so that the steam can escape. Begin unloading the dishwasher only once the dishes are barely warm to the touch. Empty the low basket first. This prevents water form dropping off dishes in the upper basket.
	Wrong program has been selected.	In short programs the washing temperature is lower. This also lowers cleaning performance. Choose a program with a long washing time.
	Use of cutlery with a low-quality coating.	Water drainage is more difficult with these items. Cutlery or dishes of this type are not suitable for washing in the dishwasher.

LOADING THE BASKETS ACCORDING TO AS/NZS 2007.1:

1.Upper basket:

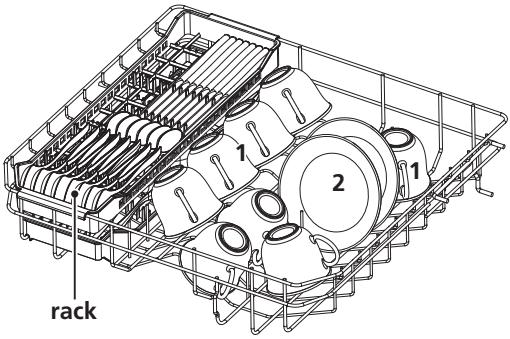

Number	Item
1	Cups
2	Saucers

2.Lower basket:

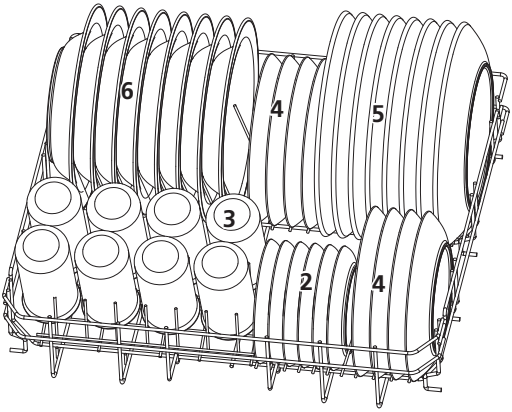

Number	Item
3	Glasses
4	Dessert dishes
5	Dinner plates
6	Soup plates

3.Cutlery rack:

Up rack

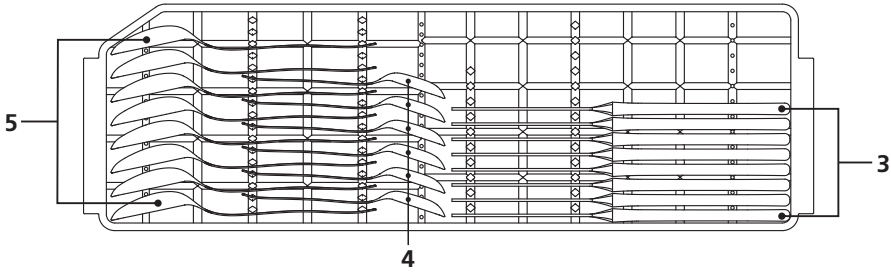

Down rack

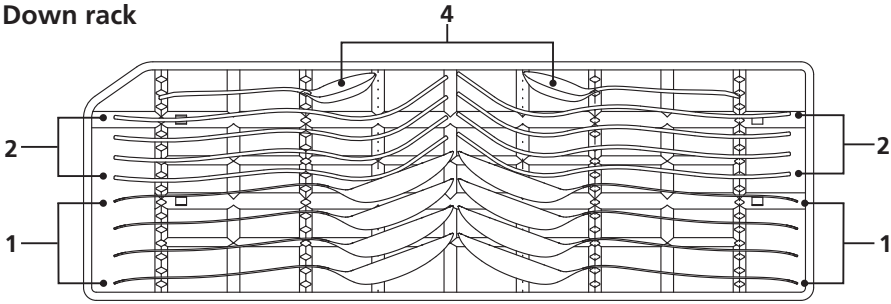

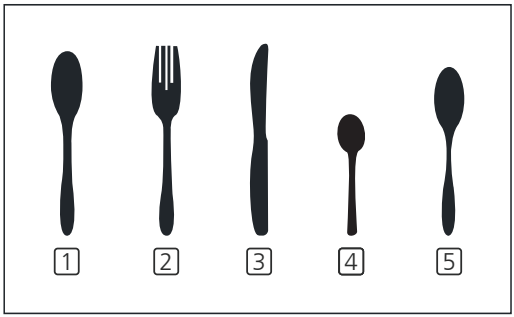

Number	Item
1	Soup spoons
2	Forks
3	Knives
4	Teaspoons
5	Dessert spoons

Information for comparability tests in accordance with (*AS/NZS 2007.1)
Capacity: 8 place settings
Program: ECO
Rinse aid setting: 5
Detergent(Pre/main): 5/20g
Door is open at the end of the drying cycle for the drying performance test and last 40mins.
(Door position: Open 50 mm)

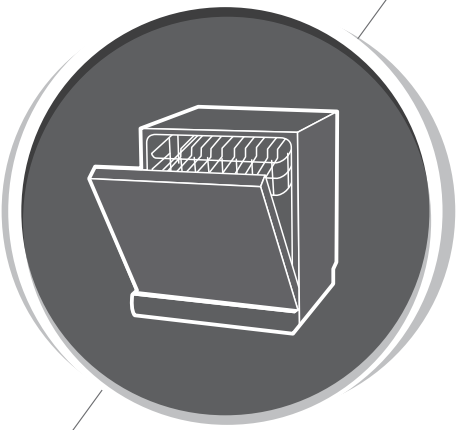

Dishwasher
Instruction Manual

PART II: Special Version

ADW5608B / ADW5608S / ADW5608W

ARTUSI

Please read this manual carefully
before using the dishwasher and
Keep this manual for future reference.

CONTENTS

01

4 **USING YOUR DISHWASHER**
4 Control Panel
6 Preparing And Loading Dishes
9 Function Of The Rinse Aid And Detergent
10 Filling The Rinse Aid Reservoir
11 Filling The Detergent Dispenser

02

12 **PROGRAMMING THE DISHWASHER**
12 Wash Cycle Table
13 Starting A Cycle Wash
13 Changing The Program Mid-cycle
14 Forget To Add A Dish?

03

15 **ERROR CODES**

04

16 **TECHNICAL INFORMATION**

NOTE:

- If you cannot solve the problems by yourself, please ask for help from a professional technician.
- The manufacturer, following a policy of constant development and updating of the product, may make modifications without giving prior notice.
- If lost or out-of-date, you can receive a new user manual from the manufacturer or responsible vendor.

QUICK USER GUIDE

Please read the corresponding content on the instruction manual for detailed operating method.

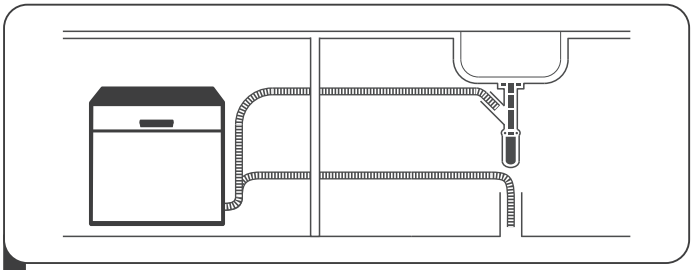

1 Install the dishwasher
(Please check the section 5 "INSTALLATION INSTRUCTION " of PART Ⅰ: Generic Version.)

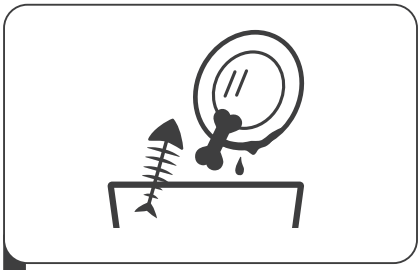

2 Removing the larger residue on the cutlery

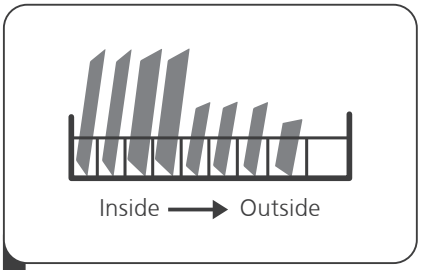

3 Loading the baskets

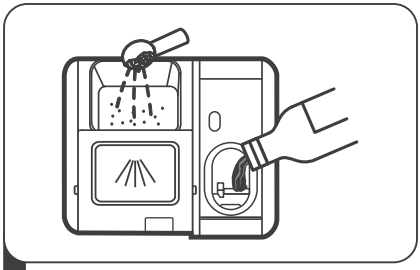

4 Filling the dispenser

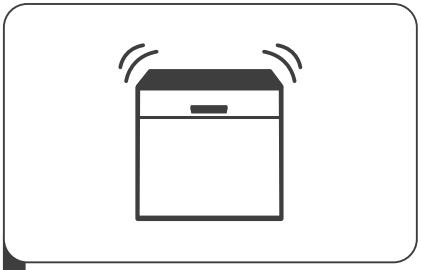

5 Selecting a program and running the dishwasher

USING YOUR DISHWASHER

Control Panel

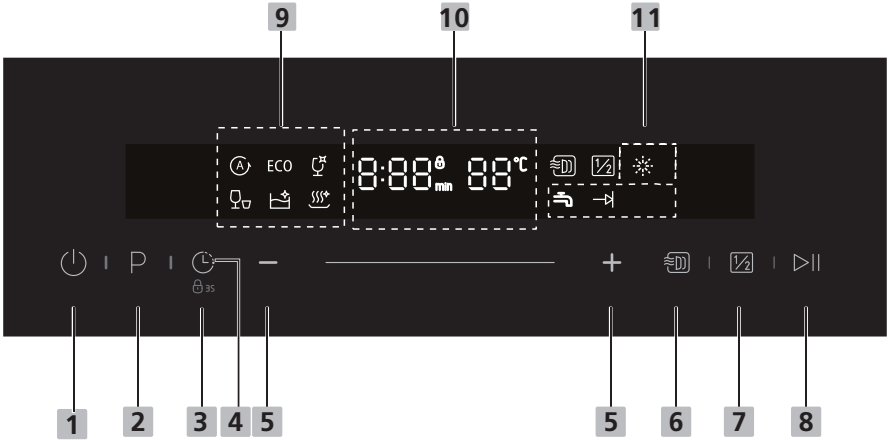

Operation (Button)

1	**Power**	Press this button to turn on your dishwasher,the screen lights up.
2	**Program**	Press this button to select the appropriate washing program, the selected program indicator will be lit.
3	**Child lock**	Press the buttons for 3 seconds simultaneously to lock the button, except the power button.
4	**Delay**	Press the button to cancel appointment, the display shows "H:00" then the digital display will return to the program time after 3 seconds.
5	**Delay −/+**	Press the "+" button to add the delay time or press the "-" button to decrease the delay time, maximum 24 hours delay can be defined.
6	**Fresh function**	To select fresh function, Effectively remove the dishwasher odor, mildew anti-back tide and improve drying.Press this button to select this function for 4/24/72 hours, synchronously with the program selection or long press to turn on independently. (It can't be used with Rapid).

Display

7	**Half load**	When you have about or less than 5 place setting dishware to wash, you can choose this function to save energy and water. (It can only be used with Hygiene, ECO and Glass .) When pressing this button, corresponding indicator will be lit.
8	**Start / Pause**	To start the selected washing program or pause it when the dishwasher is working.
9	**Program indicator**	**Auto** Auto sensing wash, lightly, or heavily soiled crockery, with or without dried-on food. ECO **ECO** This is standard program, it is suitable to clean normally soiled loads, such as pots, plates, glasses and lightly soiled pans, standard everyday cycle. **Glass** For lightly soiled crockery and glass. **Rapid** A shorter wash for lightly soiled loads that do not need drying. **Self Clean** This program provides an effective cleaning of the dishwasher itself. **Hygiene** Use to sanitize your dishes and glassware. The highest water temperature is 75℃.
10	**screen**	To show the reminding time and the state(running state, delay time and check messageetc) If an problem occurs during an operation, an check message is displayed with a warning sound.Refer to the “Error codes” section. **Note:** When the remaining washing time is less than 1 hour, the "min" indicator will be lit.
11	**Warning Indicator**	Rinse Aid If the “ ” indicator is lit, it means the dishwasher is low on dishwasher rinse aid and requires a refill. Water Faucet If the “ ” indicator is lit, it means the water faucet closed. Program end When the program is end, the indicator will be lit.

Preparing And Loading Dishes

- Consider buying utensils which are identified as dishwasher-proof.
- For particular items, select a program with the lowest possible temperature.
- To prevent damage, do not take glass and cutlery out of the dishwasher immediately after the program has ended.

For washing the following cutlery/dishes

Are not suitable

- Cutlery with wooden, horn china or mother-of-pearl handles
- Plastic items that are not heat resistant
- Older cutlery with glued parts that are not temperature resistant
- Bonded cutlery items or dishes
- Pewter or cooper items
- Crystal glass
- Steel items subject to rusting
- Wooden platters
- Items made from synthetic fibres

Are of limited suitability

- Some types of glasses can become dull after a large number of washes
- Silver and aluminum parts have a tendency to discolour during washing
- Glazed patterns may fade if machine washed frequently

Recommendations for loading the dishwasher

Scrape off any large amounts of leftover food. Soften remnants of burnt food in pans.It is not necessary to rinse the dishes under running water.
For best performance of the dishwasher, follow these loading guidelines.
(Features and appearance of baskets and cutlery baskets may vary from your model.)
Place objects in the dishwasher in following way:

- Items such as cups, glasses, pots/pans, etc. are faced downwards.
- Curved items, or ones with recesses, should be loaded aslant so that water can run off.
- All utensils are stacked securely and can not tip over.
- All utensils are placed in the way that the spray arms can rotate freely during washing.

- Load hollow items such as cups, glasses, pans etc. With the opening facing downwards so that water cannot collect in the container or a deep base.
- Dishes and items of cutlery must not lie inside one another, or cover each other.
- To avoid damage, glasses should not touch one another.
- The upper basket is designed to hold more delicate and lighter dishware such as glasses, coffee and tea cups.
- Long bladed knives stored in an upright position are a potential hazard!
- Long and / or sharp items of cutlery such as carving knives must be positioned horizontally in the upper basket.
- Please do not overload your dishwasher. This is important for good results and for reasonable consumption of energy.

NOTE:

Very small items should not be washed in the dishwasher as they could easily fall out of the basket.

Removing the dishes

To prevent water dripping from the upper basket into the lower basket, we recommend that you empty the lower basket first, followed by the upper basket.

⚠ WARNING

Items will be hot! To prevent damage, do not take glass and cutlery out of the dishwasher for around 15 minutes after the program has ended.

Loading the upper basket

The upper basket is designed to hold more delicate and lighter dishware such as glasses, coffee and tea cups and saucers, as well as plates, small bowls and shallow pans (as long as they are not too dirty).Position the dishes and cookware so that they will not get moved by the spray of water.

Loading the lower basket

We suggest that you place large items and the most difficult to clean items are to be placed into the lower basket: such as pots, pans, lids, serving dishes and bowls, as shown in the figure below. It is preferable to place serving dishes and lids on the side of the racks in order to avoid blocking the rotation of the top spray arm.
The maximum diameter advised for plates in front of the detergent dispenser is of 19 cm, this not to hamper the opening of it.

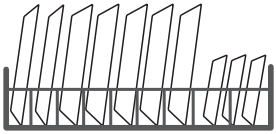

Loading the cutlery rack

Cutlery should be placed in the cutlery rack separatelyfrom each other in the appropriate positions, and do make sure the utensils do not nest together, this may cause bad performance.

⚠ WARNING

Do not let any item extend through the bottom.
Always load sharp utensils with the sharp point down!

For the best washing effect, please load the baskets refer to standard loading options on last section of PART Ⅰ: Generic Version

Function Of The Rinse Aid And Detergent

The rinse aid is released during the final rinse to prevent water from forming droplets on your dishes, which can leave spots and streaks. It also improves drying by allowing water to roll off the dishes. Your dishwasher is designed to use liquid rinse aids.

⚠ WARNING

Only use branded rinse aid for dishwasher. Never fill the rinse aid dispenser with any other substances (e.g. Dishwasher cleaning agent, liquid detergent). This would damage the appliance.

When to refill the rinse aid

The regularity of the dispenser needing to be refilled depends on how often dishes are washed and the rinse aid setting used.

- The Low Rinse Aid indicator ( ) will appear in the display when more rinse aid is needed.
- Do not overfill the rinse aid dispenser.

Function of detergent

The chemical ingredients that compose the detergent are necessary to remove, crush and dispense all dirt out of the dishwasher. Most of the commercial quality detergents are suitable for this purpose.

⚠ WARNING

- Proper Use of Detergent
  Use only detergent specifically made for dishwashers use. Keep your detergent fresh and dry.
  Don't put powdered detergent into the dispenser until you are ready to wash dishes.
-
  Dishwasher detergent is corrosive!Keep dishwasher detergent out of the reach of children.

Filling The Rinse Aid Reservoir

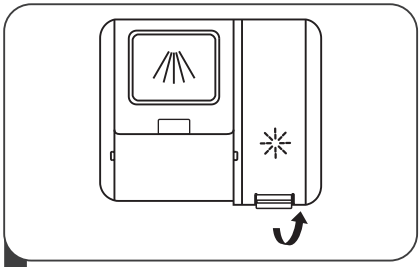

1 Remove the rinse reservoir cap by lifting up the handle .

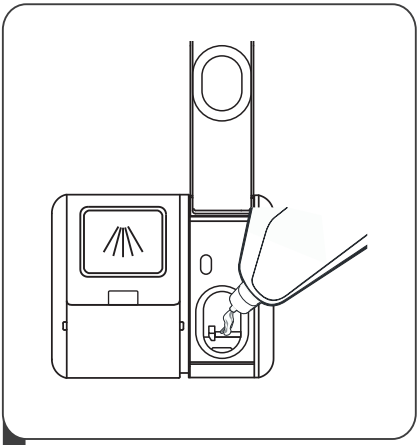

2 Pour the rinse aid into the dispenser, being careful not to overfill.

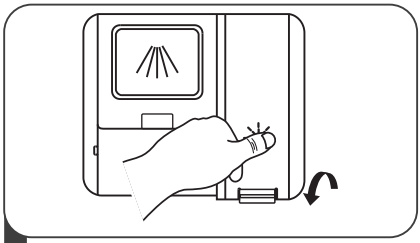

3 Close the cap after all.

Adjusting the rinse aid reservoir

To achieve a better drying performance with limited rinse aid, the dishwasher is designed to adjust the consumption by user. Follow the below steps.

1. Power on the dishwasher by plugging in;
2. Within 60 seconds after step 1, press the **Program** button more than 5 seconds, the rinse aid indication blinks as 1Hz frequency.
3. Press the **Program** button to select the proper set according to your using habits, the setting will change in the following sequence: d1->d2->d3->d4->d5->d1. Dispenser drops more rinse aid in D5 level than in another, the manufactory setting is d2.
4. Without operation in 5 seconds or press on/off button to complete the setup and exit the setting mode.

Filling The Detergent Dispenser

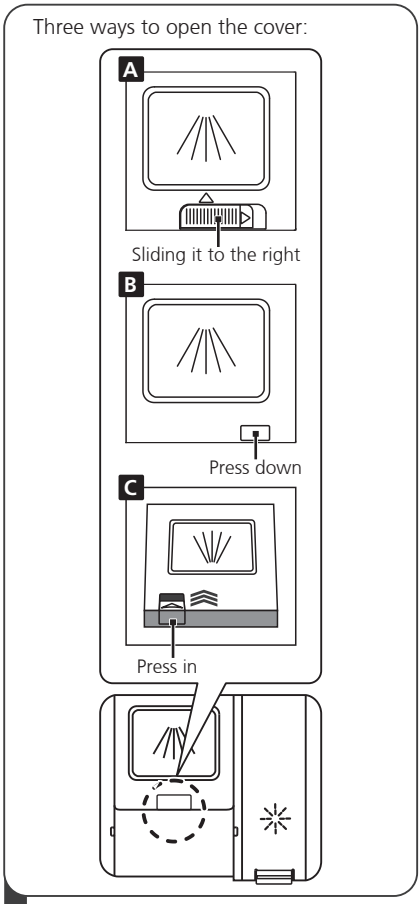

1 Please choose an open way according to the actual situation.

A. Open the cap by sliding the release latch.

B. Open the cap by pressing down the release latch.

C. Open the cap by pressing in the release latch.

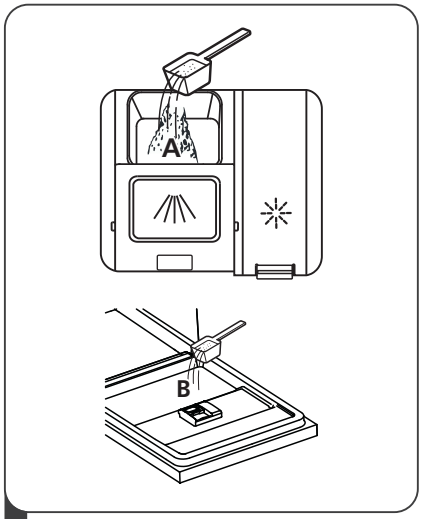

2 Add detergent into the larger cavity (A) for main wash.
For better cleaning result, especially if you have very dirt items, pour a small amount of detergent onto the door. The additional detergent will activate during the pre-wash phase.

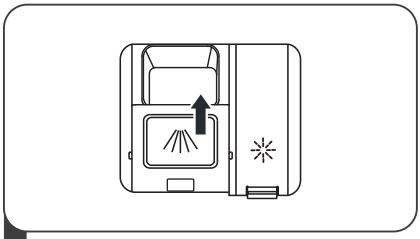

3 Close the flap by sliding it to the front and then pressing it down.

NOTE:

Please observe the manufacturer's recommendations on the detergent packaging.

PROGRAMMING THE DISHWASHER

Wash Cycle Table

The table below shows which programs are best for the levels of food residue on them and how much detergent is needed. It also show various information about the programs.

(●)Means: need to fill rinse into the Rinse-Aid Dispenser.

Program	Description Of Cycle	Detergent Pre/Main	Running Time(min)	Energy (kWh)	Water (L)	Rinse Aid
Auto	Pre-wash(45℃) Wash(50-60℃) Rinse Autorinse(55-60℃) Drying	5/20g (Or 1 piece)	80-150	0.580-0.970	7.6-10.1	●
ECO (*AS/NZS 2007.1)	Pre-wash Wash(50℃) Rinse(50℃) Drying	5/20g (Or 1 piece)	160	0.540	9.16	●
Glass	Wash(45℃) Rinse Rinse(60℃) Drying	5/20g (Or 1 piece)	95	0.700	12	●
Rapid	Wash(45℃) Rinse Rinse(45℃)	15g	35	0.520	7	○
Self Clean	Wash(70℃) Rinse Rinse(65℃) Drying	15g	50	0.800	5.5	●
Hygiene	Pre-wash(65℃) Wash(40℃) Rinse(75℃) Drying	5/20g (Or 1 piece)	130	1.120	7.4	●

NOTE:

AS/NZS 2007.1: This program is the test cycle. The information for comparability test in accordance with AS/NZS 2007.1.

Starting A Cycle Wash

1. Draw out the lower and upper basket, load the dishes and push them back. It is commended to load the lower basket first, then the upper one.
2. Pour in the detergent.
3. Insert the plug into the socket. The power supply refer to last page"Product fiche". Make sure that the water supply is turned on to full pressure.
4. Close the door, press the Power button, to switch on the machine.
5. Choose a program, the response light will turn on. Then press the Start/Pause button, the dishwasher will start its cycle.

Changing The Program Mid-cycle

A wash cycle can only be changed if it has been running for a short time otherwise, the detergent may have already been released and the dishwasher may have already drained the wash water. If this is the case, the dishwasher needs to be reset and the detergent dispenser must be refilled. To reset the dishwasher, follow the instructions below:

1. Press the Start/Pause button to pause the washing.
2. Press Program button for more than 3 seconds - the program will cancel.
3. Press the Program button to select the desired program.
4. Press the Start/Pause button, the dishwasher will start.

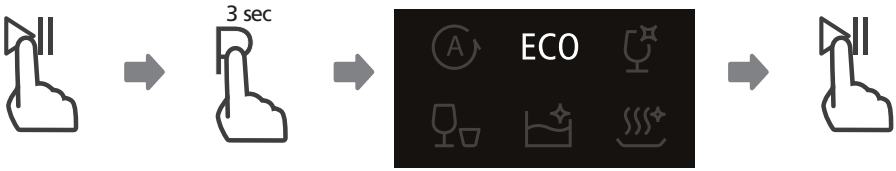

Forget To Add A Dish?

A forgotten dish can be added any time before the detergent dispenser opens. If this is the case, follow the instructions below:

1. Press the Start/Pause button to pause the washing
2. Wait 5 seconds then open the door.
3. Add the forgotten dishes,
4. Close the door.
5. Press the Start/Pause button after 10 seconds, the dishwasher will start.

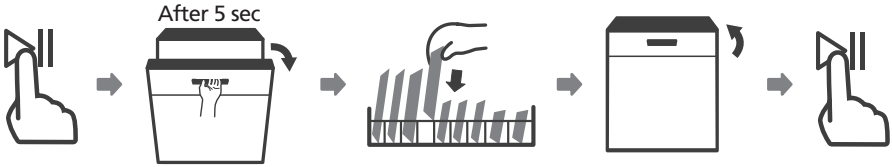

⚠ WARNING

It is dangerous to open the door mid-cycle, as hot steam may scald you.

ERROR CODES

If there is a malfunction, the dishwasher will display error codes to identify these:

Codes	Meanings	Possible Causes
E1	Longer inlet time.	Faucets is not opened, or water intake is restricted,or water pressure is too low.
E3	Not reaching required temperature.	Malfunction of heating element .
E4	Overflow.	Some element of dishwasher leaks .
E9	Keep pressing a button more than 30 seconds.	Water or something on the button.
Ed	Failure of communication between main PCB with display pcb.	Open circuit or break wiring for the communication.

⚠ WARNING

- If overflow occurs, turn off the main water supply before calling a service.
- If there is water in the base pan because of an overfill or small leak, the water should be removed before restarting the dishwasher.

TECHNICAL INFORMATION

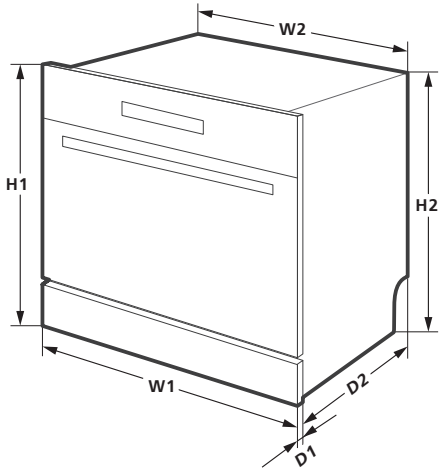

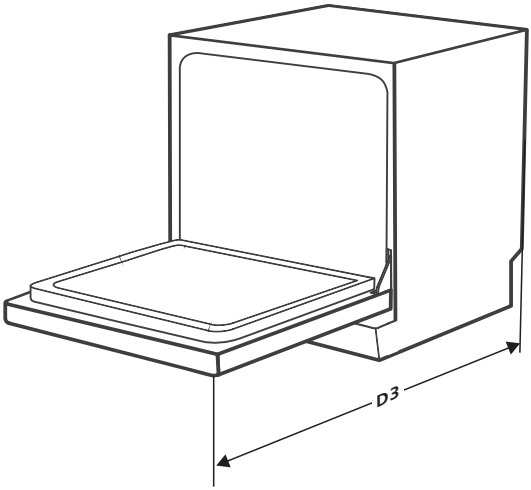

Height (H1)	595mm
Height (H2)	590mm
Width (W1)	595mm
Width (W2)	550mm

Depth (D1)	20mm
Depth (D2)	480mm
Depth (D3)	970mm

Product fiche

Manufacturer	Artusi
Type / Description	ADW5608B / ADW5608S / ADW5608W
Standard place settings	8
Energy efficiency class	★★½☆☆☆ 2.5
Water consumption class	★★★½☆☆ 3.5
Standard cleaning cycle	ECO
Energy consumption of the standard cleaning cycle	0.54 kWh
Water consumption of the standard cleaning cycle	9.16 liter
Program duration of the standard cleaning cycle	160 min
Noise level	49 dB(A) re 1 pW
Mounting	Built -in
Could be built-in	YES
Power consumption	1380-1620 W
Rated voltage / frequency	AC 220-240V/50Hz
Water pressure (flow pressure)	0.04-1.0MPa=0.4-10 bar

Warranty Card

Worldwide Appliances Pty Limited
A.B.N. 45868077422
Distributed by Eurolinx pty Ltd
Office:
48-50 Moore Street, Leichhardt N.S.W 2040
Post:
Locked Bag 3000, Annandale, N.S.W 2038
P: 1300 694 583

WARRANTY REGISTRATION

Your ongoing satisfaction with your artusi product is important to us. We ask that you complete the enclosed Warranty Registration Card and return it to us so that we have a record of the artusi product purchased by you.

PRIVACY

Worldwide Appliances respects your privacy and is committed to handling your personal information in accordance with the National Privacy Principles and the Privacy Act 1988 (Cth). A copy of the Worldwide Appliances Privacy Policy is available at www.artusi.com.au. Worldwide Appliances will not disclose any personal information set out in the Warranty Registration Card ("Personal Information") without your consent unless required by:

1. law;

2. any Worldwide Appliances related company;

3. any service provider which provide services to artusi or assist artusi in providing services (including repair and warranty services) to customers. Our purpose in collecting the Personal Information is

to keep a record of the artusi product purchased by you, in order to provide a better warranty service to you in the unlikely event that there is a problem with your artusi product. Worldwide Appliances may contact you at any one or more of the address, email address or telephone numbers set out in the Warranty Registration Card. Please contact artusi on 1300 694 583 should you not wish to be contacted by Worldwide Appliances.

WARRANTY

1. Warranty

Worldwide Appliances warrants that each artusi product will remain, for a period of either 12 months or 24 months of warranty. All Warranties are valid from the original date of purchase, And warranty claims must be accompanied by the proof of purchase.

24 months warranty products:

All Built-in Appliances – Limited to Ovens, Gas, Induction and Electric Cooktops, and All Rangehoods. Freestanding Cookers - Gas and Electric Models (900mm Width).

Dishwashers - Freestanding, Fully Integrated, Semi Integrated and built-in. All Wine coolers. All Dryers. Freestanding Cookers - Gas and Electric Models in 50cm, 54cm and 60cm Widths

Portable Appliances* – Benchtop Models and Portable Gas Models

2. What is not Covered by the Warranty.

The Warranty does not apply if an artusi product is defective by a factor other than a defect arising in the manufacture of the artusi product, including but not limited to:

(a) damage through misuse (including failure to maintain, service or use with proper care), neglect, accident or ordinary wear and tear (including deterioration of parts and accessories and glass breakage);

(b) use for purpose for which the artusi product was not sold or designed;

(c) use or installation which is not in accordance with any specified instructions for use or installation;

(d) use or operation after a defect has occurred or been discovered;

(e) damage through freight, transportation or handling in transit (other than when Worldwide Appliances is responsible);

(f) damage through exposure to chemicals, dusts, residues, excessive voltage, heat, atmospheric conditions or other forces or environmental factors outside the control or Worldwide Appliances;

(g) repair, modification or tampering by the purchaser or any person other than Worldwide Appliances, an employee of Worldwide Appliances or an authorised artusi service contractor*;

(h) use of parts, components or accessories which have not been supplied or specifically approved by artusi.

(i) damage to surface coatings caused by cleaning or maintenance using products not recommended in the artusi product handbook provided to the purchaser upon purchase of the artusi product;

(j) damage to the base of an electric oven due to items having been placed on the base of the oven cavity or covering the base, such as aluminium foil (this impedes the transfer of heat from the element to the oven cavity and can result in irreparable damage); or

(k) damages, dents or other cosmetic imperfections not affecting the performance of the artusi in respect of an artusi product purchased as a "factory second" or from display

The Warranty does not extend to light globes used in artusi products.

3. Domestic Use

Each artusi product is made for domestic use. This Warranty may not extend to artusi products used for commercial purposes.

Continued over...

4. Time for Claim under the Warranty

You must make any claim under this Warranty within twenty eight (28) days after the occurrence of an event which gives rise to a claim pursuant to the Warranty, by booking a service call on the telephone number below.

5. Proof of Purchase

Customers must retain proof of purchase in order to be eligible to make a warranty claim in respect of an artusi product.

6. Claiming under the Warranty

Customers will bear the cost of claiming under this Warranty unless Worldwide Appliances determines the expenses are reasonable, in which case the customer must claim those expenses by providing written evidence of each expense to Worldwide Appliances at the address on the Warranty Registration Card.

7. Statutory Rights

(a) These terms and conditions do not affect your statutory rights.

(b) The limitations on the Warranty set out in this document do not exclude or limit the application of the consumer guarantees set out in the Act or any other equivalent or corresponding legislation in the relevant jurisdiction where to do so would:

(i) contravene the law of the relevant jurisdiction; or

(ii) cause any part of the Warranty to be void.

(c) Worldwide Appliances excludes indirect or consequential loss of any kind (including, without limitation, loss of use of the artusi product) and (other than expressly provided for in these terms and conditions) subject to all terms,

conditions and warranties implied by custom, the general law, the Act or other statute.

(d) The liability of Worldwide Appliances to you for a breach of any express or non-excludable implied term, condition or warranty is limited at the option of Worldwide Appliances to:

(i) replacing or repairing the defective part of the artusi product;

(ii) paying the cost of replacing or repairing the defective part of the artusi product;

(iii) replacing the artusi product; or

(iv) paying the cost of replacing the artusi product.

(e) Our goods come with guarantees that cannot be excluded under the Australian Consumer Law. You are entitled to a replacement or refund for a major failure and for compensation for any other reasonably foreseeable loss or damage. You are also entitled to have the goods repaired or replaced if the goods fail to be of acceptable quality and the failure does not amount to a major failure.

8. Defects

Any part of an artusi product deemed to be defective and replaced by Worldwide Appliances is the property of Worldwide Appliances. Worldwide Appliances reserves the right to inspect and test artusi products in order to determine the extent of any defect and the validity of a claim under the Warranty.

All warranty service calls must be booked via the customer care department. The team can be contacted on 1 300 85 64 11 option 1 or customercare@eurolinx.com.au

01082016

DON'T FORGET TO REGISTER YOUR WARRANTY ONLINE NOW AT www.eurolinx.support

SCAN ME

TO REGISTER YOUR WARRANTY

ARTUSI
THE ART OF LIVING

FOLLOW US ON: /artusi_kitchen_laundry_outdoor /au.linkedin.com/company/eurolinx-ptyltd **artusi.com.au**

Australia National Telephone Number 1300 694 583
Our showrooms opening hours in each state are available on our website

NSW & ACT (Head Office)
48-50 Moore Street
Leichhardt

Victoria
2r/131 Church Street
Hawthorn

QLD
Contact
head office

WA & NT
Contact
head office

DISCLAIMER

Worldwide Appliances PTY LTD, trading as ARTUSI, is continually seeking ways to improve the design specifications, aesthetics and production techniques of its products. As a result alterations to our products and designs take place continually. Whilst every effort is made to produce information and literature that is up to date, this brochure should not be regarded as an infallible guide to the current specifications, nor does it constitute an offer for the sale of any particular product. Product dimensions indicated in our literature is indicative only. Actual product only should be used to define dimension cutouts. Distributors, and retailers are not agents of ARTUSI and are not authorised to bind ARTUSI by any express or implied undertaking or representation.