90cm Induction Freestanding Cooker

ARTUSI
THE ART OF LIVING

MODEL AFIR935B

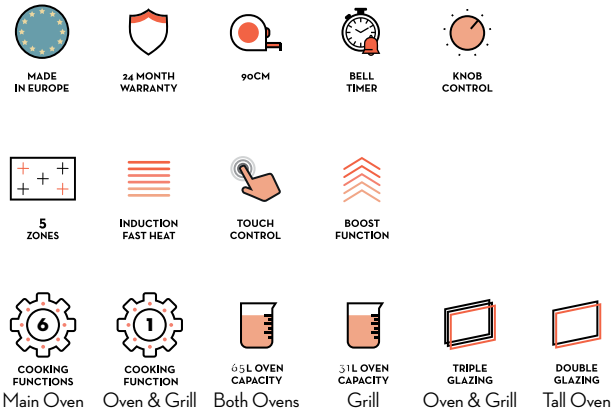

PRODUCT INFORMATION

OVEN FEATURES
- Black
- 3 door electric oven with induction hob
- analogue clock & timer
- decorative black splash back
- 40–240°C thermostat (all ovens)
- easy-to-clean inner door
- cavity cooling fan (main oven)
- left side opening door (main oven)
- right side opening door (tall oven)

FUNCTIONS
- main oven: 6 multi-function cooking modes: fan assist, top + bottom element, top element, bottom element, grill, fan grill
- tall oven: fan + rear heating element + light for cleaning
- grill: electric static grill, 1400W grill power

SAFETY
- triple-glazed glass door (grill + main oven)
- double glazed glass door (secondary tall cavity oven)

CAPACITY & INTERIOR
- easy clean enamel interior
- 1 x cavity light 15-25W in each compartment
- Main Oven:
  - cavity capacity- 59.7 litres USE-ABLE
  - cavity size: 45.5W x 41D x 32H cm
  - 4 shelf positions
- Tall Oven:
  - cavity capacity- 70 litres USE-ABLE
  - cavity size: 27W x 43D x 61H cm
  - 10 shelf positions
- Grill:
  - Cavity capacity- 32 litres USE-ABLE
  - Cavity size: 45.5W x 41D x 17.5H cm
  - 3 shelf positions

ACCESSORIES
- Main oven: deep baking tray & grill insert, 1x wire oven rack & 1x telescopic rack
- Tall oven: deep baking tray, 2 x wire racks & 1 x telescopic rack
- Grill: 1 x grill insert

COOKTOP FEATURES
- black glass cooking surface
- five zone induction cooktop with boost mode on 3 zones
- touch control panel with slide function for heat settings
- pause function & timer function
- function memory up to 10 seconds
- auto switch off (after 10 seconds of no use)

ZONES
- 2 X Ø200 (2300W-3000W) rear left & right
- 2 X Ø160 (1400W) front left & right
- 1 X Ø250 (2300W-3000W) middle
- heat settings: 0-9 & boost

SAFETY
- child lock
- residual heat indicator for (glass temperature above 65°C)

EAN 9347777005052

AR12082023

DISCLAIMER
Eurolinx PTY LTD, is continually seeking ways to improve the design specifications, aesthetics and production techniques of its products. As a result alterations to our products and designs take place continually. Whilst every effort is made to produce information and literature that is up to date, this brochure should not be regarded as an infallible guide to the current specifications, nor does it constitute an offer for the sale of any particular product. Product dimensions indicated in our literature is indicative only. Actual product only should be used to define dimension cut outs. Distributors, and retailers are not agents of Eurolinx and are not authorizsd to bind Eurolinx by any express or implied undertaking or representation.

FOLLOW US ON: /artusi_kitchen_laundry_outdoor

Australia National Telephone Number 1300 MYILVE (694 583) New Zealand Telephone Number 0508 458 369
ILVE showrooms are open daily from 9am-5pm and Saturdays 10am-4pm

artusi.com.au

NSW & ACT (Head Office)
48-50 Moore Street
Leichhardt
F 02 8569 4699

Victoria
2r/131 Church Street
Hawthorn

QLD
1/42 Cavendish Road
Coorparoo

WA & NT
Unit 10/55 Howe Street
Osborne Park

New Zealand
PO Box 11.160
Sockburn Christchurch

90cm Induction Freestanding Cooker

ARTUSI
THE ART OF LIVING

MODEL AFIR935B

TECHNICAL DIAGRAM

W 895mm

H 872mm

D 575mm

F 15-38mm

T n/a mm

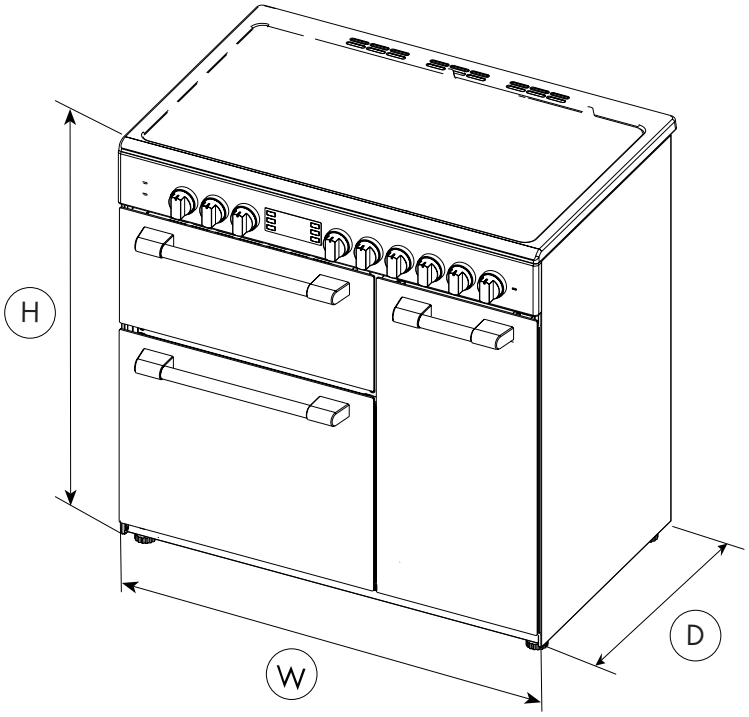

NB: drawings are not to scale — for detailed installation instructions, please refer to user guide.

EAN 9347777005052

AR12082023

AFIR935B 90cm Induction Freestanding Cooker
Dimensions: 900 wide x 600 deep x 900 high
Total power load: 15.9kW
Terminal box only: no cable
Product weight: 74.8kgs

DISCLAIMER
Eurolinx PTY LTD, is continually seeking ways to improve the design specifications, aesthetics and production techniques of its products. As a result alterations to our products and designs take place continually. Whilst every effort is made to produce information and literature that is up to date, this brochure should not be regarded as an infallible guide to the current specifications, nor does it constitute an offer for the sale of any particular product. Product dimensions indicated in our literature is indicative only. Actual product only should be used to define dimension cut outs. Distributors, and retailers are not agents of Eurolinx and are not authorissd to bind Eurolinx by any express or implied undertaking or representation.

FOLLOW US ON: /artusi_kitchen_laundry_outdoor

Australia National Telephone Number 1300 MYILVE (694 583) New Zealand Telephone Number 0508 458 369
ILVE showrooms are open daily from 9am-5pm and Saturdays 10am-4pm

artusi.com.au

NSW & ACT (Head Office)
48-50 Moore Street
Leichhardt
F 02 8569 4699

Victoria
2r/131 Church Street
Hawthorn

QLD
1/42 Cavendish Road
Coorparoo

WA & NT
Unit 10/55 Howe Street
Osborne Park

New Zealand
PO Box 11.160
Sockburn Christchurch