Freestanding Cooker
Gas Cooktop & Electric Oven

MODEL AFG915X/1
MODEL AFG915B/1

ARTUSI
THE ART OF LIVING

PRODUCT INFORMATION

FINISH
- Available in 2 finishes
- Stainless Steel
- Black enamel

OVEN FEATURES
- 9 multi function modes (1 cleaning light & 8 cooking)
- Thermostat: 50°C - 250°C
- Digital timer
- Single fan
- Side wire racks
- Full width tinted glass door
- Removable inner door glass panel
- Full internal width easy clean glass door panel

SAFETY
- Triple glazed glass door

CAVITY & INTERIOR
- 100L useable space cooking cavity
- 72cm wide x 42cm deep x 33cm high

ACCESSORIES
- Adjustable feet (removable)
- Anti-tilt chain
- Mini splashback

COOKTOP FEATURES
- cast-iron trivets and burner caps
- cast-iron wok cradle
- single-piece pressed hob for easy cleaning
- deep pressed hob

SAFETY
- automatic electronic ignition
- flame failure safety device fitted to each burner

BURNERS
- 5 gas burners:
  - 1 x auxiliary:
  - 2 x semi-rapid:
  - 1 x rapid:
  - 1 x centre WOK placement:
- total gas consumption: 39.0 MJ/h

TECHNICAL INFORMATION
- See page 2

AFG915X/1 EAN 9347777005083
AFG915B/1 EAN 9347777005076

AR01112023

DISCLAIMER
Eurolinx PTY LTD, is continually seeking ways to improve the design specifications, aesthetics and production techniques of its products. As a result alterations to our products and designs take place continually. Whilst every effort is made to produce information and literature that is up to date, this brochure should not be regarded as an infallible guide to the current specifications, nor does it constitute an offer for the sale of any particular product. Product dimensions indicated in our literature is indicative only. Actual product only should be used to define dimension cut outs. Distributors, and retailers are not agents of Eurolinx and are not authorised to bind Eurolinx by any express or implied undertaking or representation.

FOLLOW US ON: /artusi_kitchen_laundry_outdoor

Australia National Telephone Number 1300 694 583
For showroom opening times, visit our website

artusi.com.au

NSW & ACT (Head Office)
48-50 Moore Street
Leichhardt
F 02 8569 4699

Victoria
2r/131 Church Street
Hawthorn

QLD
Contact Head Office

WA & NT
Contact Head Office

Freestanding Cooker
Gas Cooktop & Electric Oven

MODEL AFG915X/1
MODEL AFG915B/1

TECHNICAL DIAGRAM

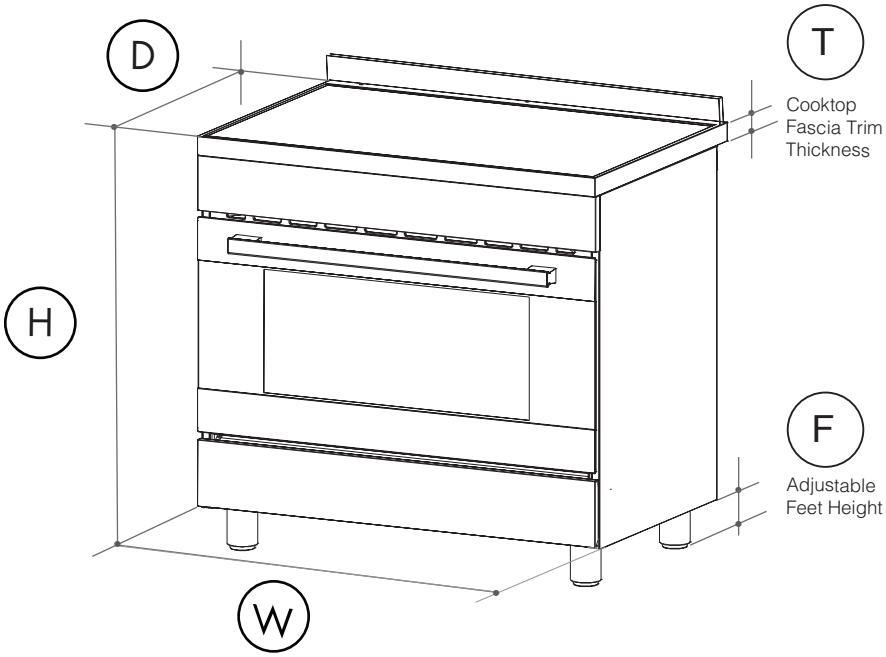

W	900mm	F	0-40mm
H	760mm	T	28mm
D	603mm		

NB: drawings are not to scale — they are to be used for detailed installation instructions, please refer to user guide.

AFG915 Freestanding Cooker with Gas Hob
Total oven power: 3.3 kw/h
Total cooktop power: 39 mj/h (natural gas)
Power cable supplied: 15amp 3 pin
Power cable length: 1.5m

AFG915X/1 EAN 9347777005083
AFG915B/1 EAN 9347777005076

AR01112023

DISCLAIMER

Eurolinx PTY LTD, is continually seeking ways to improve the design specifications, aesthetics and production techniques of its products. As a result alterations to our products and designs take place continually. Whilst every effort is made to produce information and literature that is up to date, this brochure should not be regarded as an infallible guide to the current specifications, nor does it constitute an offer for the sale of any particular product. Product dimensions indicated in our literature is indicative only. Actual product only should be used to define dimension cut outs. Distributors, and retailers are not agents of Eurolinx and are not authorised to bind Eurolinx by any express or implied undertaking or representation.

FOLLOW US ON: /artusi_kitchen_laundry_outdoor

Australia National Telephone Number 1300 694 583
For showroom opening times, visit our website

artusi.com.au

NSW & ACT (Head Office)
48-50 Moore Street
Leichhardt
F 02 8569 4699

Victoria
2r/131 Church Street
Hawthorn

QLD
Contact Head Office

WA & NT
Contact Head Office