Fully Integrated Dishwasher

ARTUSI
THE ART OF LIVING

MODEL ADWFI700

MADE IN EUROPE | 24 MONTH WARRANTY | 60CM | PLACE SETTINGS | 9 WASH PROGRAMS

ECO WASH | TOUCH CONTROL | DELAY TIMER | LOW NOISE | 10AMP POWER CONNECTION

ARTUSI NOW WITH 5 YEAR WARRANTY

WATER RATING www.waterrating.gov.au 12.2 litres per wash

ENERGY RATING 245

PRODUCT INFORMATION

FINISH
- fully integrated

CAPACITY
- 15 place setting (2 baskets + 3rd layer removeable cutlery tray)

FEATURES
- Electronic LED touch control panel
- Delay timer option- (1 through to 19hr)
- 3 metal filters: Main, Coarse & Micro
- Stainless Steel cavity
- Hidden heating element
- Electrical divertor system
- Auto door opening (EnergySave)
- Rinse aid indicator
- Turbidity sensor (smart wash)
- Temperatures (°C)- Auto-30°-40°-50°-60°-65°-70°
- Turbo Drying system
- Circulation pump- BLDC
- Adjustable upper basket when empty
- Adjustable mug shelves
- Wine glass holder on middle basket
- Foldable racks on ower basket
- Noise Level (dB(A))- 47
- Tablet option
- LED cavity light
- End of cycle indicator (beep)

PROGRAMS
- 9 wash programs- Mini 14’, Quick 30’ 40°, Eco, Super 50’ 65°, Dual Pro Wash, Hygiene 70°, Smart 30°-50°, Smart 50°-60°, Smart 60°-70°
- Self clean option
- Extra Hygiene option
- Extra Silent option
- Extra Fast option
- Energy Save option
- Delay start

SAFETY
- Overflow & leakage protection
- Heater protection
- Stoper on lower basket

TECHNICAL
- Door panel weight: 3-8kgs
- Stand by power: 0.95W

EAN 9347777005090

AR17082023

DISCLAIMER

Eurolinx PTY LTD, is continually seeking ways to improve the design specifications, aesthetics and production techniques of its products. As a result alterations to our products and designs take place continually. Whilst every effort is made to produce information and literature that is up to date, this brochure should not be regarded as an infallible guide to the current specifications, nor does it constitute an offer for the sale of any particular product. Product dimensions indicated in our literature is indicative only. Actual product only should be used to define dimension cut outs. Distributors, and retailers are not agents of Eurolinx and are not authorised to bind Eurolinx by any express or implied undertaking or representation.

FOLLOW US ON: /artusi_kitchen_laundry_outdoor

Australia National Telephone Number 1300 MYILVE (694 583) New Zealand Telephone Number 0508 458 369
ILVE showrooms are open daily from 9am-5pm and Saturdays 10am-4pm

artusi.com.au

NSW & ACT (Head Office)
48-50 Moore Street
Leichhardt
F 02 8569 4699

Victoria
2r/131 Church Street
Hawthorn

QLD
1/42 Cavendish Road
Coorparoo

WA & NT
Unit 10/55 Howe Street
Osborne Park

New Zealand
PO Box 11.160
Sockburn Christchurch

Fully Integrated Dishwasher

ARTUSI
THE ART OF LIVING

MODEL ADWFI700

TECHNICAL DIAGRAM

W 598mm

H 820-870mm

P 647-717mm

D 570mm

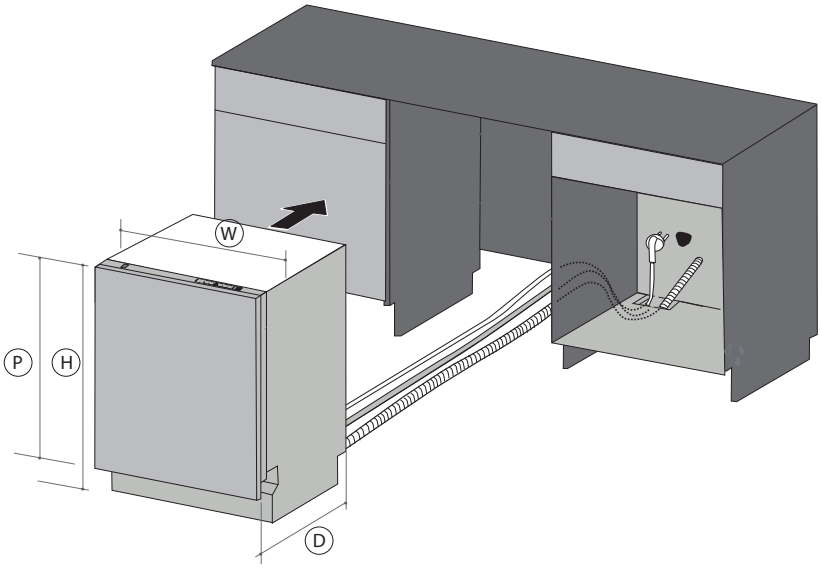

NB: drawings are not to scale — they are to be used for detailed installation instructions, please refer to user guide.

EAN 9347777005090

AR17082023

ADWFI700 Fully Integrated Dishwasher
Water supply pressure - Maximum: 1 (Mpa) Minimum: 0.03 (Mpa)
Drain hose: 180cm
Water inlet hose: 150cm
GPO Power cord length 170cm
Total power: 1900(W)

DISCLAIMER

Eurolinx PTY LTD, is continually seeking ways to improve the design specifications, aesthetics and production techniques of its products. As a result alterations to our products and designs take place continually. Whilst every effort is made to produce information and literature that is up to date, this brochure should not be regarded as an infallible guide to the current specifications, nor does it constitute an offer for the sale of any particular product. Product dimensions indicated in our literature is indicative only. Actual product only should be used to define dimension cut outs. Distributors, and retailers are not agents of Eurolinx and are not authorised to bind Eurolinx by any express or implied undertaking or representation.

FOLLOW US ON: /artusi_kitchen_laundry_outdoor

Australia National Telephone Number 1300 MYILVE (694 583) New Zealand Telephone Number 0508 458 369
ILVE showrooms are open daily from 9am-5pm and Saturdays 10am-4pm

artusi.com.au

NSW & ACT (Head Office)
48-50 Moore Street
Leichhardt
F 02 8569 4699

Victoria
2r/131 Church Street
Hawthorn

QLD
Contact Head Office

WA & NT
Unit 10/55 Howe Street
Osborne Park

New Zealand
PO Box 11.160
Sockburn Christchurch